Angles Exam Practice

Note: Unless stated, all diagrams are not drawn accurately.

Q1. Find the missing angle in the triangle below:

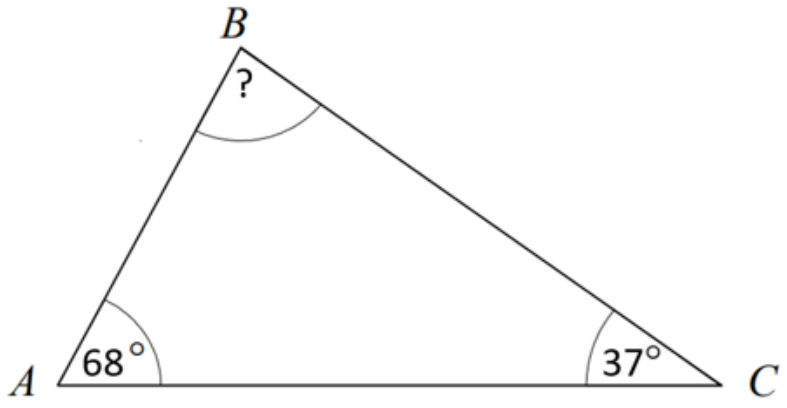

Answer:_____

(2 marks)

Q2. Work out angle x

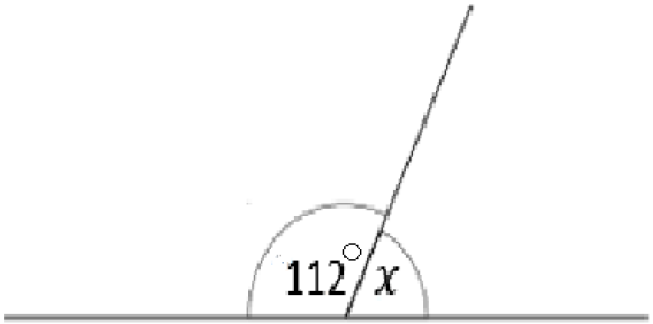

Answer:_____

(2 marks)

Q3. Work out angle x, showing your working out.

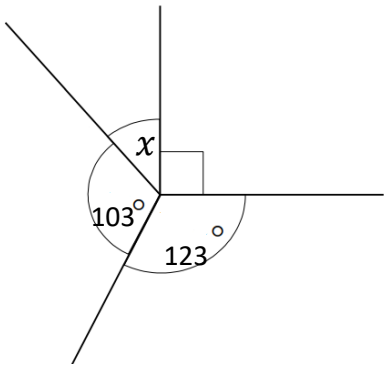

Answer:_____

(2 marks)

Q4. Work out the angle below, justifying your answer.

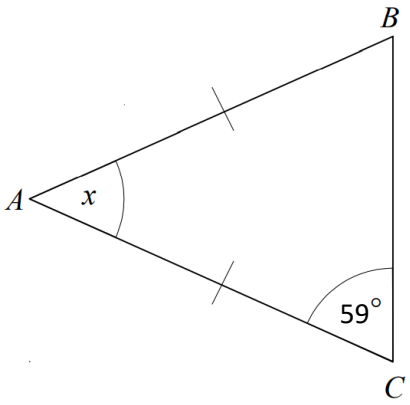

Answer:_____

(2 marks)

Q5. Find the missing angles. You must give reasons for your answers.

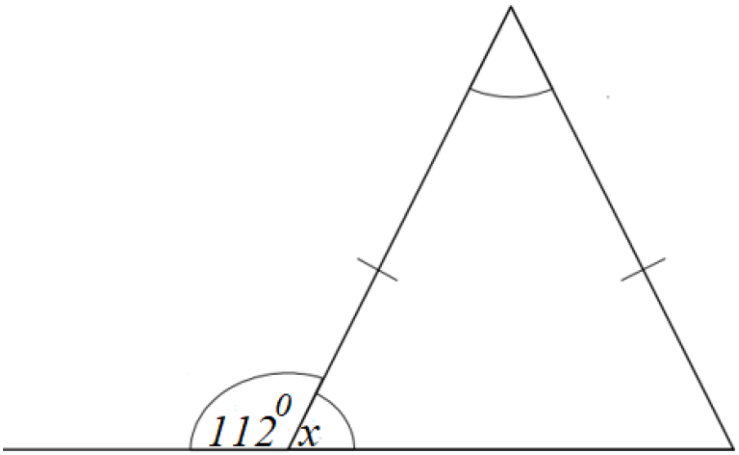

Answer:_____

(4 marks)

Q6. ABCD is a square. Work out the size of angle CAD. You must explain your reasoning.

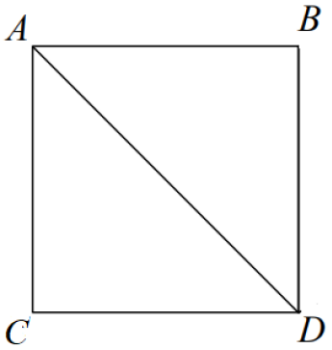

Answer:_____

(2 marks)

Q7. Draw an example of each of the following angles:

(i) an obtuse angle (ii) a reflex angle

Answer:_____

(2 marks)

Q8. Work out angles D and DBE, giving reasons for your answers.

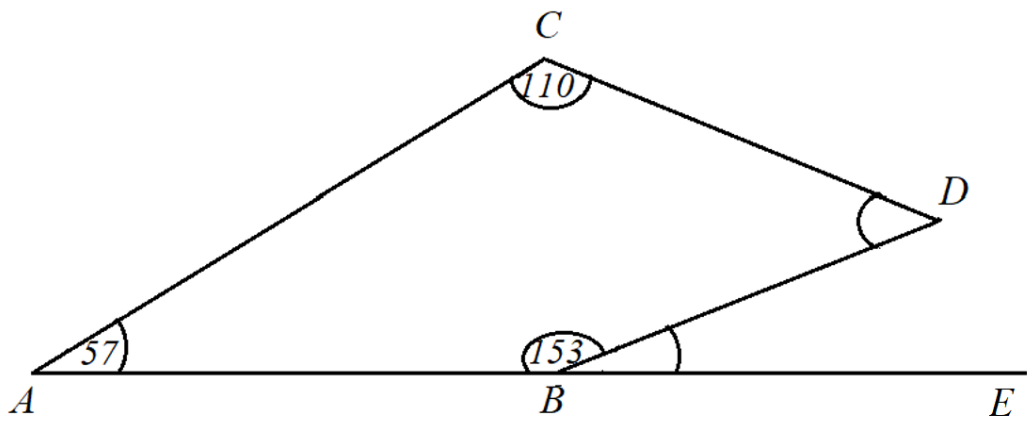

Answer:_____

(4 marks)

Q9. Draw an angle which is of size 66°

Answer:_____

(1 mark)

Q10. Here is a clock face, with the minute and hour hand removed.

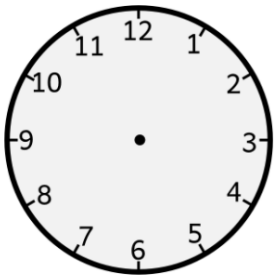

(i) If the time was 8.20pm, what would be the size of the reflex angle which the hands would make?

Answer:_____

(2 marks)

(ii) State a time which would create an angle of 75°

Answer:_____

(1 mark)

Q11. Work out angle the size of P and Q. Give reasons for your answers.

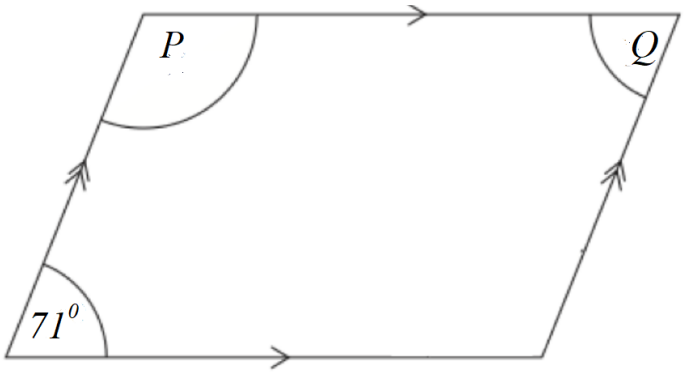

Answer:_____

(4 marks)

Q12. Find the size of angle c, showing your working.

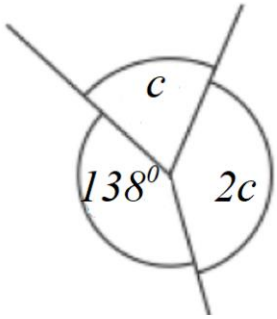

Answer:_____

(2 marks)